ANEXO I

Norma IEC-61508-6 (páginas 115, 117, 119 y 121)

Table D.1 – Scoring programmable electronics or sensors/final elements

Item	Logic subsystem		Sensors and final elements	
	X_{LS}	Y_{LS}	X_{SF}	Y_{SF}
Separation/segregation				
Are all signal cables for the channels routed separately at all positions?	1,5	1,5	1,0	2,0
Are the logic subsystem channels on separate printed-circuit boards?	3,0	1,0		
Are the logic subsystem channels in separate cabinets?	2,5	0,5		
If the sensors/final elements have dedicated control electronics, is the electronics for each channel on separate printed-circuit boards?			2,5	1,5
If the sensors/final elements have dedicated control electronics, is the electronics for each channel indoors and in separate cabinets?			2,5	0,5
Diversity/redundancy				
Do the channels employ different electrical technologies for example, one electronic or programmable electronic and the other relay?	7,0			
Do the channels employ different electronic technologies for example, one electronic, the other programmable electronic?	5,0			
Do the devices employ different physical principles for the sensing elements for example, pressure and temperature, vane anemometer and Doppler transducer, etc?			7,5	
Do the devices employ different electrical principles/designs for example, digital and analogue, different manufacturer (not re-badged) or different technology?			5,5	
Do the channels employ enhanced redundancy with MooN architecture, where $N > M + 2$?	2,0	0,5	2,0	0,5
Do the channels employ enhanced redundancy with MooN architecture, where $N = M + 2$?	1,0	0,5	1,0	0,5
Is low diversity used, for example hardware diagnostic tests using the same technology?	2,0	1,0		
Is medium diversity used, for example hardware diagnostic tests using different technology?	3,0	1,5		
Were the channels designed by different designers with no communication between them during the design activities?	1,0	1,0		
Are separate test methods and people used for each channel during commissioning?	1,0	0,5	1,0	1,0
Is maintenance on each channel carried out by different people at different times?	2,5		2,5	
Complexity/design/application/maturity/experience				
Does cross-connection between channels preclude the exchange of any information other than that used for diagnostic testing or voting purposes?	0,5	0,5	0,5	0,5
Is the design based on techniques used in equipment that has been used successfully in the field for > 5 years?	0,5	1,0	1,0	1,0
Is there more than 5 years experience with the same hardware used in similar environments?	1,0	1,5	1,5	1,5
Is the system simple, for example no more than 10 inputs or outputs per channel?		1,0		
Are inputs and outputs protected from potential levels of over-voltage and over-current?	1,5	0,5	1,5	0,5
Are all devices/components conservatively rated (for example, by a factor of 2 or more)?	2,0		2,0	
Assessment/analysis and feedback of data				
Have the results of the failure modes and effects analysis or fault-tree analysis been examined to establish sources of common cause failure and have predetermined sources of common cause failure been eliminated by design?		3,0		3,0
Were common cause failures considered in design reviews with the results fed back into the design? (Documentary evidence of the design review activity is required.)		3,0		3,0
Are all field failures fully analyzed with feedback into the design? (Documentary evidence of the procedure is required.)	0,5	3,5	0,5	3,5

Table D.1 *(continued)*

Item	Logic subsystem		Sensors and final elements	
	X_{LS}	Y_{LS}	X_{SF}	Y_{SF}
Procedures/human interface				
Is there a written system of work to ensure that all component failures (or degradations) are detected, the root causes established and other similar items inspected for similar potential causes of failure?		1,5	0,5	1,5
Are procedures in place to ensure that: maintenance (including adjustment or calibration) of any part of the independent channels is staggered, and, in addition to the manual checks carried out following maintenance, the diagnostic tests are allowed to run satisfactorily between the completion of maintenance on one channel and the start of maintenance on another?	1,5	0,5	2,0	1,0
Do the documented maintenance procedures specify that all parts of redundant systems (for example, cables, etc.) intended to be independent of each other, are not to be relocated?	0,5	0,5	0,5	0,5
Is all maintenance of printed-circuit boards, etc. carried out off-site at a qualified repair centre and have all the repaired items gone through a full pre-installation testing?	0,5	1,0	0,5	1,5
Does the system have low diagnostic coverage (60 % to 90 %) and report failures to the level of a field-replaceable module?	0,5			
Does the system have medium diagnostics coverage (90 % to 99 %) and report failures to the level of a field-replaceable module?	1,5	1,0		
Does the system have high diagnostics coverage (>99 %) and report failures to the level of a field-replaceable module?	2,5	1,5		
Does the system diagnostic tests report failures to the level of a field-replaceable module?			1,0	1,0
Competence/training/safety culture				
Have designers been trained (with training documentation) to understand the causes and consequences of common cause failures?	2,0	3,0	2,0	3,0
Have maintainers been trained (with training documentation) to understand the causes and consequences of common cause failures?	0,5	4,5	0,5	4,5
Environmental control				
Is personnel access limited (for example locked cabinets, inaccessible position)?	0,5	2,5	0,5	2,5
Is the system likely to operate always within the range of temperature, humidity, corrosion, dust, vibration, etc., over which it has been tested, without the use of external environmental control?	3,0	1,0	3,0	1,0
Are all signal and power cables separate at all positions?	2,0	1,0	2,0	1,0
Environmental testing				
Has the system been tested for immunity to all relevant environmental influences (for example EMC, temperature, vibration, shock, humidity) to an appropriate level as specified in recognized standards?	10,0	10,0	10,0	10,0

NOTE 1 A number of the items relate to the operation of the system, which may be difficult to predict at design time. In these cases, the designers should make reasonable assumptions and subsequently ensure that the eventual user of the system is made aware of, for example, the procedures to be put in place in order to achieve the designed level of safety integrity. This could be by including the necessary information in the accompanying documentation.

NOTE 2 The values in the *X* and *Y* columns are based on engineering judgement and take into account the indirect as well as the direct effects of the items in column 1. For example, the use of field-replaceable modules leads to

– repairs being carried out by the manufacturer under controlled conditions instead of (possibly incorrect) repairs being made under less appropriate conditions in the field. This leads to a contribution in the *Y* column because the potential for systematic (and, hence, common cause) failures is reduced;

– a reduction in the need for on-site manual interaction and the ability quickly to replace faulty modules, possibly on-line, so increasing the efficacy of the diagnostics for identifying failures before they become common-cause failures. This leads to a strong entry in the *X* column.

Table D.2 – Value of *Z*: programmable electronics

Diagnostic coverage	Diagnostic test interval		
	Less than 1 min	Between 1 min and 5 min	Greater than 5 min
≥ 99 %	2,0	1,0	0
≥ 90 %	1,5	0,5	0
≥ 60 %	1,0	0	0

Table D.3 – Value of *Z*: sensors or final elements

Diagnostic coverage	Diagnostic test interval			
	Less than 2 h	Between 2 h and two days	Between 2 days and one week	Greater than one week
≥ 99 %	2,0	1,5	1,0	0
≥ 90 %	1,5	1,0	0,5	0
≥ 60 %	1,0	0,5	0	0

NOTE 1 The methodology is most effective if account is taken uniformly across the list of the categories in table D.1. Therefore, it is strongly recommended that the total score in the *X* and *Y* columns for each category should be not less than the total score in the *X* and *Y* columns divided by 20. For example, if the total score ($X + Y$) is 80, none of the categories (for example, procedures/human interface) should have a total score ($X + Y$) of less than four.

NOTE 2 When using table D.1, take account of the scores for all items that apply. The scoring has been designed to allow for items which are not mutually exclusive. For example, a system with logic subsystem channels in separate racks is entitled to both the score for "Are the logic subsystem channels in separate cabinets?" and that for "Are the logic subsystem channels on separate printed-circuit boards?".

NOTE 3 If sensors or final elements are PE-based, they should be treated as part of the logic subsystem if they are enclosed within the same building (or vehicle) as the device that constitutes the major part of the logic subsystem, and as sensors or final elements if they are not so enclosed.

NOTE 4 For a non-zero value of *Z* to be used, it should be ensured that the equipment under control is put into a safe state before a non-simultaneous common cause failure can affect all the channels. The time taken to assure this safe state should be less than the claimed diagnostic test interval. A non-zero value for *Z* can be used only if

- the system initiates an automatic shut-down on detection of a fault; or
- a safe shut-down is not initiated after a first fault [1], but the diagnostic tests
  - determine the locality of the fault and are capable of localizing the fault, and
  - continue to be capable of placing the EUC in a safe state after the detection of any subsequent faults; or
- a formal system of work is in place to ensure that the cause of any revealed fault is fully investigated within the claimed diagnostic test interval and
  - if the fault has the potential for leading to a common cause failure, the plant is immediately shut-down, or
  - the faulty channel is repaired within the claimed diagnostic test interval.

NOTE 5 In the process industries, it is unlikely to be feasible to shut down the EUC when a fault is detected within the diagnostic test interval as described in table D.2. This methodology should not be interpreted as a requirement for process plants to be shut down when such faults are detected. However, if a shut-down is not implemented, no reduction in the β-factor can be gained by the use of diagnostic tests for the programmable electronics. In some industries, a shut-down may be feasible within the described time. In these cases, a non-zero value of *Z* may be used.

NOTE 6 Where diagnostic tests are carried out in a modular way, the repetition time used in tables D.2 or D.3 is the time between the successive completions of the full set of diagnostic testing modules. The diagnostic coverage is the total coverage provided by all of the modules.

---

1) The operation of the system on the identification of a fault should be taken into account. For example, a simple 2oo3 system should be shut down (or repaired) within the times quoted in tables D.2 or D.3, following the identification of a single failure. If this is not done, a failure of a second channel could result in the two failed channels outvoting the remaining (good) channel. A system which automatically reconfigures itself to 1oo2 voting when one channel fails, and which automatically shuts down on the occurrence of a second failure, has an increased probability of revealing the fault in the second channel and so a non-zero value for *Z* may be claimed.

Table D.4 – Calculation of β or β_D

Score (S or S_D)	Corresponding value of β or β_D for the:	
	Logic subsystem	Sensors or final elements
120 or above	0,5 %	1 %
70 to 120	1 %	2 %
45 to 70	2 %	5 %
Less than 45	5 %	10 %

NOTE 1 The maximum levels of β_D shown in this table are lower than would normally be used, reflecting the use of the techniques specified elsewhere in this standard for the reduction in the probability of systematic failures as a whole, and of common cause failures as a result of this.

NOTE 2 Values of β_D lower than 0,5 % for the logic subsystem and 1 % for the sensors would be difficult to justify.

D.7 Examples of the use of the methodology

In order to demonstrate the effect of using the methodology, some simple examples have been worked through in table D.5 for the **programmable electronics**.

For categories not relating to diversity nor redundancy, typical values for X and Y were used. These were obtained by halving the maximum score for the category.

In the diverse system examples, the values for the diversity/redundancy category are derived from the following properties considered in table D.1:

- one system is electronic, the other uses relay technology;
- the hardware diagnostic tests use different technologies;
- the different designers did not communicate during the design process;
- different test methods and test personnel were used to commission the systems; and
- maintenance is carried out by different people at different times.

In the redundancy system examples, the values for the diversity/redundancy category are derived from the property that the hardware diagnostics are carried out by an independent system, which uses the same technology as the redundancy systems.

For both the diverse and redundancy systems, a maximum and minimum value was used for Z, leading to four example systems in total.

ANEXO II

Ejemplos de certificados SIL y FMEDA

Certificate

The Certification Body RWTÜV Systems GmbH of Product Safety and Medical Devices hereby certify

Rosemount Inc.

8200 Market Blvd.

Chanhassen, MN 55317 USA

that the product

3051S SIS Pressure Transmitter with Safety Feature Board

meets the below mentioned requirement

IEC 61508: 2000; Part 1 to Part 7
Functional safety of electrical/electronic/programmable electronic safety-related systems;
Low Demand; Type B;
SIL 2 capability for hardware (single transmitter use)
SIL 3 capability for software (multiple transmitter use)

---

based on the report No. 701-070/2002T in the valid version.

This certificate entitles the holder to use the mark:

Validation of TÜViT GmbH in cooperation with RWTÜV Systems GmbH

Certificate-Register-No.: SAS0558/04 Essen, 2004-03-15
File reference: 2.4-4055/04
Valid to: 2009-03-14

Michael Eck Dr. Ulrich Adolph

04

RWTÜV Systems GmbH
Postfach 10 32 61 - 45032 Essen

TÜV

Certificate

Manufacturer:	ASCO Controls BV Industrielaan 21 3925 BD Scherpenzeel Niederlande
Product:	3/2 Way Valves
Type:	...327 ...
Intended Use:	Automatic Solenoid Valve with safety function
Test results:	The valves of the above mentioned type series are suitable for use in safety related systems with Hardware Fault Tolerance of 1 or 2 up to and including SIL 4 according to IEC 61508 Detailed test results can be drawn from report No. S 194/02 dated 18.02.2003. The suitability for certain fields of application can only be assessed by additional evaluation of further components of the subsystem.

This certificate remains valid until February 2008.

Cologne, February 18, 2003

Test laboratory for energy appliances
Head of Laboratory

Dipl.-Ing. F. Rick

Group TÜV Rheinland/Berlin-Brandenburg
TÜV Immissionsschutz und Energiesysteme GmbH, Am Grauen Stein, D-51105 Köln

Investigation of Suitability of 3/2 Way Valves for usage in defined safety integrity levels according to IEC 61508

Manufacturer/Contractor	: **ASCO Controls BV** **Industrielaan 21** **3925 BD Scherpenzeel** **Niederlande**
Type designation	: ...327... type list see Annex 1
Test item	: automatic solenoid valve, normally closed, with emergency tripping function by spring force type tested in accordance with DIN EN 161; classification as AK 7 in accordance with DIN V 19251
maximum working pressure	: 10 bar
Permissible temperature range	: medium: -40 °C to + 120 °C (depending on material used for sealings) ambient: -40 °C to + 90 °C (depending on coils used)
Work medium:	Compressed air: clean, dry instrument air
Exposure:	open air: prot. class IP 65, IP 67 or Ex
Mounting position:	any

Test results:

On the basis of

- the prototype tests in accordance with DIN EN 161 (Report S 96/02)
- in connection with the classification of the valves as AK 7 in accordance with DIN V 19251 (Report S 97/02),
- through a total of more than 12,000,000 fault-free switching cycles in an additional test program

the following figures for the valves according to IEC 61508 are determined in the opinion of the Test Centre:

- probability of failure of the safety function on demand
  PFD < 4 x 10^{-7} at a confidence interval of 95%
- The Safe Failure Fraction (SFF) according to Table A1, IEC61508-2 is greater or equal to 0.99.

The valves are therefore suitable to be used in safety related systems with a Hardware Fault Tolerance of 1 or 2 up to and including SIL 4.

Remarks:

These figures apply for such applications with a demand rate of an average of 1 to 10/year. The suitability for high demand mode applications can be calculated according to annex 3 based on the particular demand rate. The definitions low and/or high demand mode in IEC 61508 are deployed here accordingly, as the demand rate (frequenca of operation) and the number of operating hours during the period of application have, as a result of the design, a negligible influence on the probability of failure within the normal field of application.

The statement is valid for a period of operation of 5 years plus a maximum of 1.5 years storage time before being used for the first time.

Only the valves stated above are deemed to be the subject of this investigation. As a rule in safety related systems (E/E/PE safety related systems in accordance with IEC 61508) these represent an actuator.

Validity of the Test Report:

The validity of the test report is limited to a period of 5 years until February 2008.

Cologne, February 18, 2003

Test Laboratory for
Energy Appliances
Head of Laboratory
Dipl.-Ing. Rick

TÜV

Certificate

Manufacturer:	**ASCO Joucomatic** **53 rue de Beauce, BP 17** **28111 Lucé Cedex** **France**
Product:	**Solenoid Control Valves**
Type:	**...551 ...**
Intended Use:	**Automatic Solenoid Valve with safety function**
Test results:	**The valves of the above mentioned type series are suitable for use in safety related systems with Hardware Fault Tolerance of 1 or 2 up to and including SIL 4 according to IEC 61508** **Detailed test results can be drawn from report No. V 24 2003 T1 dated 27.05.2003.** **The suitability for certain fields of application can only be assessed by additional evaluation of further components of the subsystem.**

This certificate remains valid until June 2008.

Cologne, June 04, 2003

Test laboratory for energy appliances
Head of Laboratory

Dipl.-Ing. F. Rick

Investigation of Suitability of Solenoid Valves for usage in defined safety integrity levels according to IEC 61508

manufacturer/contractor:	ASCO Joucomatic 53 rue de Beauce, BP 17 28111 Lucé Cedex France
type:	...551... Type identification system see report annex 2
test object:	automatic solenoid control valve, 3/2-way or 5/2-way-piston valve, with 3/2-way pilot valve **monostable**: with emergency tripping function closing by spring force if auxiliary power fails
maximum working pressure:	2-10 bar
permissible temperature range:	-40 °C to + 60 °C *(depending on material used for sealings and depending on coils used)*
exposure:	open air: prot. class IP 65, IP 67 or Ex
mounting position:	any

Test results:

On the basis of

- the prototype tests in accordance with DIN EN 161 (Report S 144/02)
- in connection with the classification of the valves as AK 7 in accordance with DIN V 19251 (Report S 145/02),
- through a total of more than 12,000,000 fault-free switching cycles in an additional test program

the following figures for the valves according to IEC 61508 are determined in the opinion of the Test Centre:

- probability of failure of the safety function on demand
  PFD < 4×10^{-7} at a confidence interval of 95%
- The Safe Failure Fraction (SFF) according to Table A1, IEC61508-2 is greater or equal to 0.99.

The valves are therefore suitable to be used in safety related systems with a Hardware Fault Tolerance of 1 or 2 up to and including SIL 4.

Remarks:

These figures apply for such applications with a demand rate of an average of 1 to 10/year. The suitability for high demand mode applications can be calculated according to annex 3 based on the particular demand rate. The definitions low and/or high demand mode in IEC 61508 are deployed here accordingly, as the demand rate (frequenca of operation) and the number of operating hours during the period of application have, as a result of the design, a negligible influence on the probability of failure within the normal field of application.

The statement is valid for a period of operation of 5 years plus a maximum of 1.5 years storage time before being used for the first time.

Only the valves stated above are deemed to be the subject of this investigation. As a rule in safety related systems (E/E/PE safety related systems in accordance with IEC 61508) these represent an actuator.

Validity of the Test Report:

The validity of the test report is limited to a period of 5 years until June 2008.

Cologne, 2003-05-27

Test Laboratory for Energy Appliances
Head of Laboratory

Dipl.-Ing. F. Rick

exida.com®

excellence in dependable automation

Failure Modes, Effects and Diagnostic Analysis

Project:

3051S SIS Pressure Transmitter

Customer:

Rosemount Inc.

Chanhassen, MN

USA

Contract No.: Ros 02/11-07 R2

Report No.: Ros 02/11-07 R001

Version V2, Revision R2.0, February 2004

William M. Goble – John C. Grebe

The document was prepared using best effort. The authors make no warranty of any kind and shall not be liable in any event for incidental or consequential damages in connection with the application of the document.

© All rights reserved.

Management summary

This report summarizes the results of the Failure Modes, Effects, and Diagnostic Analysis (FMEDA) of the 3051S SIS Pressure Transmitter. A Failure Modes, Effects, and Diagnostic Analysis is one of the steps to be taken to achieve functional safety certification per IEC 61508 of a device. From the FMEDA, failure rates and Safe Failure Fraction are determined. The FMEDA that is described in this report concerns only the hardware of the 3051S SIS Pressure Transmitter, electronic and mechanical. For full functional safety certification purposes all requirements of IEC 61508 must be considered.

The 3051S SIS Pressure Transmitter is a two-wire, 4 – 20 mA smart device. It contains self-diagnostics and is programmed to send it's output to a specified failure state, either high or low upon internal detection of a failure. For safety instrumented systems usage it is assumed that the 4 – 20 mA output is used as the primary safety variable. All other possible output variants are not covered by this report. The different devices can be equipped with or without display.

Table 1 gives an overview of the different versions that belong to the considered 3051S SIS Pressure Transmitter.

Table 1: Version overview

3051S_T In-Line	3051 S In-Line Pressure Transmitter
3051S_C Coplanar	3051S Coplanar Pressure Transmitter

The 3051S SIS Pressure Transmitter is classified as a Type B[1] device according to IEC61508, having a hardware fault tolerance of 0. The analysis shows that the device has a Safe Failure Fraction between 90 and 99% (assuming that the logic solver is programmed to detect over-scale and under-scale currents) and therefore may be used up to SIL 2 as a single device.

The failure rates for the 3051S_T In-Line Pressure Transmitter are as follows:

λ^H = 59 * 10^{-9} failures per hour

λ^L = 750 * 10^{-9} failures per hour

λ^{DU} = 68 * 10^{-9} failures per hour

Table 2 lists the failure rates for 3051S_T In-Line Pressure Transmitter according to IEC 61508, assuming that the logic solver can detect both over-scale and under-scale currents.

Table 2: Failure rates according to IEC 61508 - 3051S_T In-Line

Failure Categories	λ_{sd}	λ_{su}^*	λ_{dd}	λ_{du}	SFF
Low trip	750 FIT	468 FIT	59 FIT	68 FIT	94.9%
High trip	59 FIT	468 FIT	750 FIT	68 FIT	94.9%

(*Note that the SU category includes failures that do not cause a spurious trip)

Type B component: "Complex" component (using micro controllers or programmable logic); for details see 7.4.3.1.3 of IEC 61508-2.

The failure rates for the 3051S_C Coplanar Pressure Transmitter are as follows:

λ^H = 62 * 10^{-9} failures per hour

λ^L = 777 * 10^{-9} failures per hour

λ^{DU} = 73 * 10^{-9} failures per hour

Table 2 lists the failure rates for 3051S_C Coplanar Pressure Transmitter according to IEC 61508, assuming that the logic solver can detect both over-scale and under-scale currents.

Table 3: Failure rates according to IEC 61508 - 3051S_C Coplanar

Failure Categories	λ_{sd}	λ_{su}^*	λ_{dd}	λ_{du}	SFF
Low trip	777 FIT	448 FIT	62 FIT	73 FIT	94.6%
High trip	66 FIT	448 FIT	777 FIT	73 FIT	94.6%

(*Note that the SU category includes failures that do not cause a spurious trip)

These failure rates are valid for the useful lifetime of the product, which is > 50 years.

A user of the 3051S SIS Pressure Transmitter can utilize these failure rates in a probabilistic model of a safety instrumented function (SIF) to determine suitability in part for safety instrumented system (SIS) usage in a particular safety integrity level (SIL). A full table of failure rates is presented in section 4.5 along with all assumptions.

exida.com®
excellence in dependable automation

Table of Contents

Management summary 2

1 Purpose and Scope 5

2 Project management 6

2.1 exida.com 6

2.2 Roles of the parties involved 6

2.3 Standards / Literature used 6

2.4 Reference documents 7

2.4.1 Documentation provided by the customer 7

2.4.2 Documentation generated by *exida.com* 7

3 Product Description 8

4 Failure Modes, Effects, and Diagnostics Analysis 9

4.1 Description of the failure categories 9

4.2 Methodology – FMEDA, Failure rates 10

4.2.1 FMEDA 10

4.2.2 Failure rates 10

4.3 Assumptions 10

4.4 Behavior of the safety logic solver 11

4.5 Results 12

5 Using the FMEDA results 14

5.1 Impulse line clogging 14

5.2 Converting failure rates to IEC 61508 format 14

5.3 PFD_{AVG} calculation 3051S SIS Pressure Transmitter 15

6 Terms and Definitions 17

7 Status of the document 18

7.1 Liability 18

7.2 Releases 18

7.3 Future Enhancements 18

7.4 Release Signatures 18

Appendix A: Proof tests to reveal dangerous undetected faults 19

A.1 Proof test 1 19

A.1 Proof test 2 19

Appendix B: Lifetime of critical components 20

1 Purpose and Scope

Generally three options exist when doing an assessment of sensors, interfaces and/or final elements.

Option 1: Hardware assessment according to IEC 61508

Option 1 is a hardware assessment by exida.com according to the relevant functional safety standard(s) like DIN V VDE 0801, IEC 61508 or EN 954-1. The hardware assessment contains a FMEDA to determine the fault behavior and the different failure rates resulting in the Safe Failure Fraction (SFF) and the average Probability of Failure on Demand (PFD_{AVG}).

This option for pre-existing hardware devices shall provide the safety instrumentation engineer with the required failure data as per IEC 61508 / IEC 61511 and does not contain any software assessment.

Option 2: Hardware assessment with proven-in-use consideration according to IEC 61508 / IEC 61511

Option 2 is an assessment by exida.com according to the relevant functional safety standard(s) like DIN V VDE 0801, IEC 61508 or EN 954-1. The hardware assessment contains a FMEDA to determine the fault behavior and the different failure rates resulting in the Safe Failure Fraction (SFF) and the average Probability of Failure on Demand (PFD_{AVG}). The option contains in addition an assessment of the proven-in-use demonstration of the device and its software including the modification process.

This option for pre-existing programmable electronic devices shall provide the safety instrumentation engineer with the required failure data as per IEC 61508 / IEC 61511 and justify the reduced fault tolerance requirements of IEC 61511 for sensors, final elements and other PE field devices.

Option 3: Full assessment according to IEC 61508

Option 3 is a full assessment by exida.com according to the relevant application standard(s) like IEC 61511 or EN 298 and the necessary functional safety standard(s) like DIN V VDE 0801, IEC 61508 or EN 954-1. The full assessment extends option 1 by an assessment of all fault avoidance and fault control measures during hardware and software development.

This option is most suitable for newly developed software based field devices and programmable controllers to demonstrate full compliance with IEC 61508 to the end-user.

This assessment shall be done according to option 1.

This document shall describe the results of the Failure Modes, Effects, and Diagnostic Analysis (FMEDA) of the 3051S SIS Pressure Transmitter. From these failure rates, the Safe Failure Fraction (SFF) and example PFD_{AVG} values are calculated.

2 Project management

2.1 *exida.com*

exida.com is one of the world's leading knowledge companies specializing in automation system safety and availability with over 100 years of cumulative experience in functional safety. Founded by several of the world's top reliability and safety experts from assessment organizations like TUV and manufacturers, *exida.com* is a partnership with offices around the world. *exida.com* offers training, coaching, project oriented consulting services, internet based safety engineering tools, detail product assurance and certification analysis and a collection of on-line safety and reliability resources. *exida.com* maintains a comprehensive failure rate and failure mode database on process equipment.

2.2 Roles of the parties involved

Rosemount Inc. Manufacturer of the 3051S SIS Pressure Transmitter

exida.com Project leader of the FMEDA

Rosemount Inc. contracted *exida.com* in November 2002 with the FMEDA and PFD_{AVG} calculation of the above-mentioned device.

2.3 Standards / Literature used

The services delivered by *exida.com* were performed based on the following standards / literature.

[N1]	IEC 61508-2: 1999	Functional Safety of Electrical/Electronic/Programmable Electronic Safety-Related Systems
[N2]	FMD-91 & FMD-97, RAC 1991, 1997	Failure Mode / Mechanism Distributions, Reliability Analysis Center. Statistical compilation of failure mode distributions for a wide range of components
[N3]	NPRD-95, RAC 1995	Nonelectronic Parts Reliability Data, Reliability Analysis Center. Statistical compilation of failure rate data, incl. mechanical and electrical sensors
[N4]	SN 29500	Failure rates of components
[N5]	US MIL-STD-1629	Failure Mode and Effects Analysis, National Technical Information Service, Springfield, VA. MIL 1629.
[N6]	Telcordia (Bellcore) Failure rate database and models	Statistical compilation of failure rate data over a wide range of applications along with models for estimating failure rates as a function of the application.
[N7]	Safety Equipment Reliability Handbook, 2003	exida.com L.L.C, Safety Equipment Reliability Handbook, 2003, ISBN 0-9727234-0-4
[N8]	Goble, W.M. 1998	Control Systems Safety Evaluation and Reliability, ISA, ISBN #1-55617-636-8. Reference on FMEDA methods

2.4 Reference documents

2.4.1 Documentation provided by the customer

[D1]	03151-3510, Rev AA	Schematic Drawing SIS/NON-SIS Feature Board, sheets 1 to 8
[D2]	03151-4214, Rev AA	Schematic Cosmos Supermodule Transient Terminal Block, Dual compartment sheet 1 of 1
[D3]	03151-1514, Rev AA	Schematic Coplanar Board II, 3051S sheets 1 to 5
[D4]	03151-1511. Rev AK	Schematic Cosmos Supermodule, 3051T sheets 1 to 5

2.4.2 Documentation generated by *exida.com*

[R1]	SFB FMEDA update after fault injection 020304.xls	Failure rate calculations SFB, 3051S SIS Pressure Transmitter, February 03, 2004
[R2]	SM_Coplanar FMEDA_CAN_Mode_V2R 04.xls	Failure rate calculations, 3051S Pressure Transmitter Coplaner, October 3, 2003
[R3]	SM_Inline FMEDA_CAN_Mode_V2R 03.xls	Failure rate calculations, 3051S Pressure Transmitter In-Line, October 3, 2003
[R4]	3051S SIS Summary 06Feb04.xls	FMEDA Summary sheet 3051S SIS Pressure Transmitter, February 06, 2004
[R5]	Ros 02-11-07 R001 V220.doc	FMEDA report, 3051S SIS Pressure Transmitter, February 06, 2004

3 Product Description

The 3051S SIS Pressure Transmitter is a two-wire, 4 – 20 mA smart device. It contains self-diagnostics and is programmed to send it's output to a specified failure state, either high or low upon internal detection of a failure. This report assumes that the jumper is set to send the output low.

For safety instrumented systems usage it is assumed that the 4 – 20 mA output is used as the primary safety variable. All other possible output variants are not covered by this report. The different devices can be equipped with or without display. Table 1 gives an overview of the two versions of the 3051S SIS Pressure Transmitter that were considered for this FMEDA analysis.

Table 4: Version overview

3051S_T In-Line	3051S In-Line Pressure Transmitter
3051S_C Coplanar	3051S Coplanar Pressure Transmitter

Figure 1 gives a graphical representation of the 3051S SIS Pressure Transmitter.

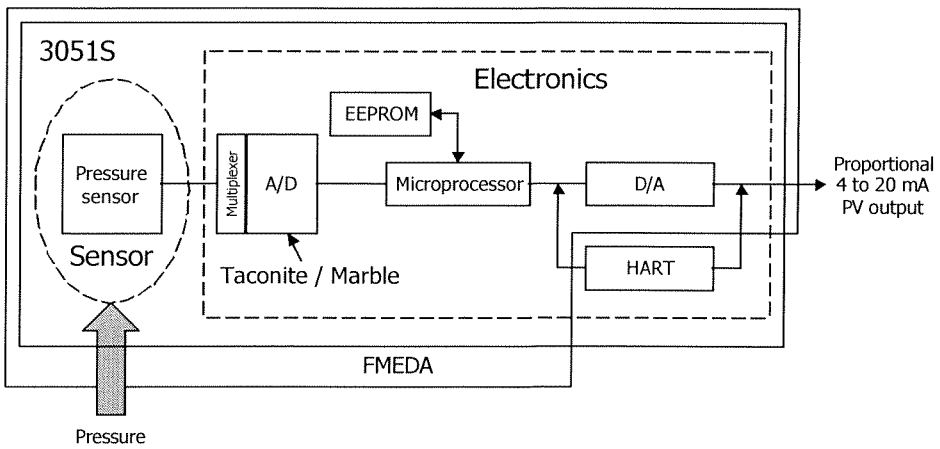

Figure 1 3051S SIS Pressure Transmitter

The 3051S SIS Pressure Transmitter is classified as a Type B[2] device according to IEC61508, having a hardware fault tolerance of 0.

The pressure transmitter can be connected to the process using an impulse line, depending on the application the clogging of the impulse line needs to be accounted for.

Type B component: "Complex" component (using micro controllers or programmable logic); for details see 7.4.3.1.3 of IEC 61508-2.

4 Failure Modes, Effects, and Diagnostics Analysis

The Failure Modes, Effects, and Diagnostic Analysis was based on documentation provided by Rosemount Inc. and is documented in [R1] and [R5]. When the effect of a certain failure mode could not be analyzed theoretically, the failure modes were introduced on component level and the effects of these failure modes were examined on system level.

4.1 Description of the failure categories

In order to judge the failure behavior of the 3051S SIS Pressure Transmitter, the following definitions for the failure of the product were considered.

Fail-Safe State	Depending on the application the fail-safe state is defined as the output going to fail low or fail high.
Fail Safe	Failure that causes the module / (sub)system to go to the defined fail-safe state without a demand from the process. Safe failures are divided into safe detected (SD) and safe undetected (SU) failures.
Fail Dangerous	Failure that deviates the measured input state or the actual output by more than 2% of span and that leaves the output within active scale (including frozen output).
Fail Dangerous Undetected	Failure that is dangerous and that is not being diagnosed by internal diagnostics.
Fail Dangerous Detected	Failure that is dangerous but is detected by internal diagnostics (These failures may be converted to the selected fail-safe state).
Fail High	Failure that causes the output signal to go to the maximum output current (> 21,5 mA, output saturate high)
Fail Low	Failure that causes the output signal to go to the minimum output current (< 3,6 mA, output saturate low)
Fail No Effect	Failure of a component that is part of the safety function but that has no effect on the safety function.
Annunciation Undetected	Failure that does not directly impact safety but does impact the ability to detect a future fault (such as a fault in a diagnostic circuit) and that is not detected by internal diagnostics.

The failure categories listed above expand on the categories listed in [N1] which are only safe and dangerous, both detected and undetected. The reason for this is that, depending on the application, a Fail High or a Fail Low can either be safe or dangerous and may be detected or undetected depending on the programming of the logic solver. Consequently, during a Safety Integrity Level (SIL) verification assessment the Fail High and Fail Low failure categories need to be classified as either safe or dangerous.

The Annunciation Undetected failures are provided for those who wish to do reliability modeling more detailed than required by IEC61508. In IEC 61508 [N1] the No Effect and Annunciation Undetected failures are defined as safe undetected failures even though they will not cause the safety function to go to a safe state. Therefore they need to be considered in the Safe Failure Fraction calculation.

4.2 Methodology – FMEDA, Failure rates

4.2.1 FMEDA

A Failure Modes and Effects Analysis (FMEA) is a systematic way to identify and evaluate the effects of different component failure modes, to determine what could eliminate or reduce the chance of failure, and to document the system in consideration.

An FMEDA (Failure Mode Effect and Diagnostic Analysis) is an FMEA extension. It combines standard FMEA techniques with extension to identify online diagnostics techniques and the failure modes relevant to safety instrumented system design. It is a technique recommended to generate failure rates for each important category (safe detected, safe undetected, dangerous detected, dangerous undetected, fail high, fail low) in the safety models. The format for the FMEDA is an extension of the standard FMEA format from MIL STD 1629A, Failure Modes and Effects Analysis.

4.2.2 Failure rates

The failure rate data used by *exida.com* in this FMEDA is from a proprietary component failure rate database derived using the Telcordia (N6) failure rate database/models, the SN29500 (N4) failure rate database and other sources. The rates were chosen in a way that is appropriate for safety integrity level verification calculations. The rates were chosen to match operating stress conditions typical of an industrial field environment similar to IEC 645-1, Class C. It is expected that the actual number of field failures will be less than the number predicted by these failure rates.

The user of these numbers is responsible for determining their applicability to any particular environment. Accurate plant specific data may be used for this purpose. If a user has data collected from a good proof test reporting system that indicates higher failure rates, the higher numbers shall be used. Some industrial plant sites have high levels of stress. Under those conditions the failure rate data is adjusted to a higher value to account for the specific conditions of the plant.

4.3 Assumptions

The following assumptions have been made during the Failure Modes, Effects, and Diagnostic Analysis of the 3051S SIS Pressure Transmitter.

- Only a single component failure will fail the entire product
- Failure rates are constant, wear out mechanisms are not included.
- Propagation of failures is not relevant.
- All components that are not part of the safety function and cannot influence the safety function (feedback immune) are excluded.
- The HART protocol is only used for setup, calibration, and diagnostics purposes, not for safety critical operation.
- The application program in the logic solver is constructed in such a way that Fail High and Fail Low failures are detected regardless of the effect, safe or dangerous, on the safety function.

- The 3051S SIS Pressure Transmitter is programmed to send it's output low upon internal detection of a failure; this is advised to avoid dangerous failures at low compliance voltages
- The stress levels are average for an industrial environment and can be compared to the Ground Fixed classification of MIL-HNBK-217F. Alternatively, the assumed environment is similar to:
    - IEC 645-1, Class C (sheltered location) with temperature limits within the manufacturer's rating and an average temperature over a long period of time of 40°C. Humidity levels are assumed within manufacturer's rating.
- External power supply failure rates are not included.

4.4 Behavior of the safety logic solver

Depending on the application, the following scenarios are possible:

- Low Trip: the safety function will go to the predefined fail-safe state when the process value below a predefined low set value. A current < 3.6mA (Fail Low) is below the specified trip-point.
- High Trip: the safety function will go to the predefined fail-safe state when the process value exceeds a predefined high set value. A current > 21.5mA (Fail High) is above the specified trip-point.

The Fail Low and Fail High failures can either be detected or undetected by a connected logic solver. The PLC Detection Behavior in Table 5 represents the under-range and over-range detection capability of the connected logic solver.

Table 5 Application example

Application	PLC Detection Behavior	λ_{low}	λ_{high}
Low trip	< 4mA	$= \lambda_{sd}$	$= \lambda_{du}$
Low trip	> 20mA	$= \lambda_{su}$	$= \lambda_{dd}$
Low trip	< 4mA and > 20mA	$= \lambda_{sd}$	$= \lambda_{dd}$
Low trip	-	$= \lambda_{su}$	$= \lambda_{du}$
High trip	< 4mA	$= \lambda_{dd}$	$= \lambda_{su}$
High trip	> 20mA	$= \lambda_{du}$	$= \lambda_{sd}$
High trip	< 4mA and > 20mA	$= \lambda_{dd}$	$= \lambda_{sd}$
High trip	-	$= \lambda_{du}$	$= \lambda_{su}$

In this analysis it is assumed that the logic solver is able to detect under-range and over-range currents, therefore the yellow highlighted behavior is assumed.

4.5 Results

Using reliability data extracted from the exida.com component reliability database the following failure rates resulted from the 3051S SIS Pressure Transmitter FMEDA, In-Line and Coplanar version.

Table 6 Failure rates 3051S_T In-Line Pressure Transmitter

Failure category			Failure rate (in FITs)
Fail High (detected by the logic solver)			59
Fail Low (detected by the logic solver)			750
	Fail detected (int. diag.)	470	
	Fail low (inherently)	280	
Fail Dangerous Undetected			68
No Effect			437
Annunciation Undetected			31

Table 7 Failure rates 3051S_C Coplanar Pressure Transmitter

Failure category			Failure rate (in FITs)
Fail High (detected by the logic solver)			62
Fail Low (detected by the logic solver)			777
	Fail detected (int. diag.)	500	
	Fail low (inherently)	277	
Fail Dangerous Undetected			73
No Effect			409
Annunciation Undetected			39

As it is assumed that upon the detection of a failure the output will be sent downscale, all detected failure categories are sub-categories of the Fail Low failure category. When the transmitter is configured to send the output over-range on detection of a failure, all detected failures would be a sub-category of the Fail High failure category.

According to IEC 61508 [N1], the Safe Failure Fraction (SFF) of the 3051S SIS Pressure Transmitter should be calculated. The SFF is the fraction of the overall failure rate of a device that results in either a safe fault or a diagnosed unsafe fault. As both the Fail High and Fail Low failure categories are assumed to be detected by the logic solver (regardless of the fact if their effect is safe or dangerous), the Safe Failure Fraction can be calculated independently of the 3051S SIS Pressure Transmitter application.

This is reflected in the following formulas for SFF:

$SFF = 1 - \lambda_{du} / \lambda_{total}$

Note that according to IEC61508 definition the No Effect and Annunciation Undetected failures are classified as safe and therefore need to be considered in the Safe Failure Fraction calculation and are included in the total failure rate.

Table 8 Safe Failure Fraction of 3051S SIS Pressure Transmitter

3051S SIS Pressure Transmitter	SFF
3051S_T In-Line Pressure Transmitter	94.9%
3051S_C Coplanar Pressure Transmitter	94.6%

The architectural constraint type for 3051S SIS Pressure Transmitter is B. The SFF and required SIL determine the level of hardware fault tolerance that is required per requirements of IEC 61508 [N1] or IEC 61511. The SIS designer is responsible for meeting other requirements of applicable standards for any given SIL as well.

5 Using the FMEDA results

5.1 Impulse line clogging

The 3051S SIS Pressure Transmitter failure rates that are displayed in section 4.5 are failure rates that reflect the situation where the transmitter is used in clean service. Clean service indicates that failure rates due to clogging of the impulse line are not counted. For applications other than clean service, the user must estimate the failure rate for the clogged impulse line and add this failure rate to the 3051S SIS Pressure Transmitter failure rates.

5.2 Converting failure rates to IEC 61508 format

The failure rates that are derived from the FMEDA for the 3051S SIS Pressure Transmitter are in a format different from the IEC 61508 format. This section will explain how the failure rates can be converted into the IEC 61508 format.

Depending on the application, the high and low failures of the 3051S SIS Pressure Transmitter must be classified as either safe or dangerous (see also Section 4.4). Assume an application where a safety action needs to be performed if the pressure in a pipe drops below a certain level. The transmitter will therefore be configured with a low trip level. A low failure of the transmitter will cause the transmitter output to go through the low trip level. Consequently the transmitter will indicate that the safety action needs to be performed. Therefore a low failure can be classified as a safe failure for this application. A high failure on the other hand will cause the transmitter output to move away from the trip level and therefore not cause a trip. The failure will prevent the transmitter from indicating that the safety action needs to be performed and is therefore classified as a dangerous failure for this application.

Assuming that the logic solver can detect both over-range and under-range, a low failure can be classified as a safe detected failure and a high failure can be classified as a dangerous detected failure. The failure rates for the 3051S_T In-Line Pressure Transmitter would then be:

$\lambda^{H} = \lambda^{DD} =$ $59 * 10^{-9}$ failures per hour

$\lambda^{L} = \lambda^{SD} =$ $750 * 10^{-9}$ failures per hour

$\lambda^{DU} =$ $68 * 10^{-9}$ failures per hour

For this application the failure rates for the 3051S_C Coplanar Pressure Transmitter would be:

$\lambda^{H} = \lambda^{DD} =$ $62 * 10^{-9}$ failures per hour

$\lambda^{L} = \lambda^{SD} =$ $777 * 10^{-9}$ failures per hour

$\lambda^{DU} =$ $73 * 10^{-9}$ failures per hour

In a similar way the high and low failure rates can be classified as respectively safe detected and dangerous detected in case the application has a high trip level. The failure rates as displayed above are the same failure rates as stored in the exida.com equipment database that is part of the online SIL verification tool, SILver.

Furthermore the No Effect failures and Annunciation Undetected failure are classified as Safe Undetected failures according to IEC 61508. Note that these failures will not affect system reliability or safety, and should not be included in spurious trip calculations.

Note that the dangerous undetected failures will of course remain dangerous undetected.

5.3 PFD_{AVG} calculation 3051S SIS Pressure Transmitter

An average Probability of Failure on Demand (PFD_{AVG}) calculation is performed for a single (1oo1) 3051S SIS Pressure Transmitter. The failure rate data used in this calculation is displayed in section 4.5.

The PFD_{AVG} values for the 3051S_T In-Line Pressure Transmitter, for a variety of proof test intervals are displayed in Figure 2. As shown in the figure the PFD_{AVG} value for a single 3051S_T In-Line Pressure Transmitter with a proof test interval of 1 year equals 2.58E-04.

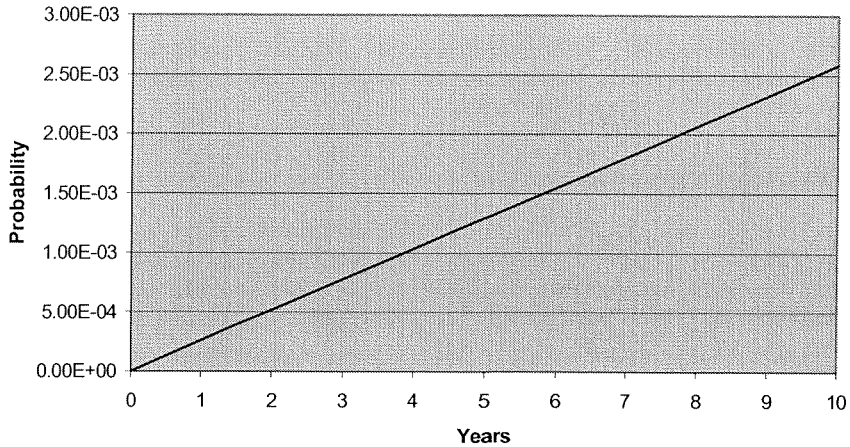

Figure 2: $PFD_{AVG}(t)$ 3051S_T In-Line Pressure Transmitter

The PFD_{AVG} values for the 3051S_C Coplanar Pressure Transmitter, for a variety of proof test intervals are displayed in Figure 3. As shown in the figure the PFD_{AVG} value for a single 3051S_C Coplanar Pressure Transmitter with a proof test interval of 1 year equals 3.20E-04.

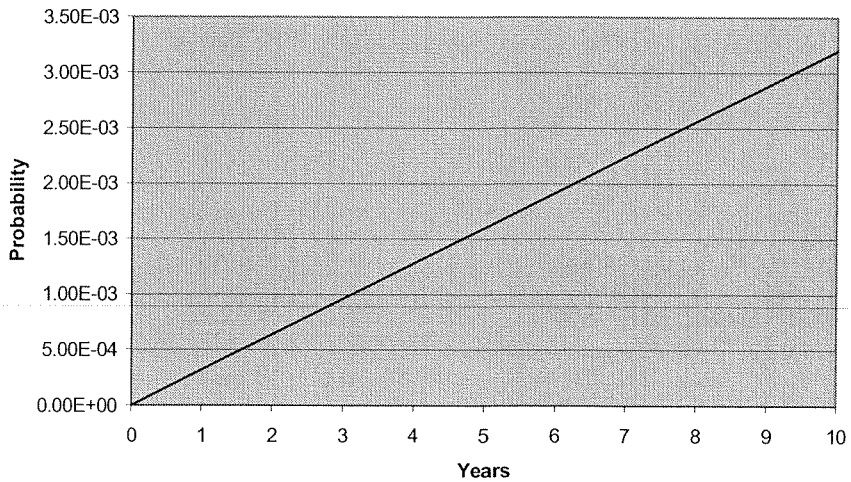

Figure 3 $PFD_{AVG}(t)$ 3051S_C Coplanar Pressure Transmitter

For SIL 2 applications, the PFD_{AVG} value needs to be = 10^{-3} and < 10^{-2}. This means that for a SIL 2 application, the PFD_{AVG} for a 1-year Proof Test Interval of the 3051S_T In-Line Pressure Transmitter, is equal to 2.58% of the range and for the 3051S_C Coplanar Pressure Transmitter is equal to 3.2 % of the range.

These results must be considered in combination with PFD_{AVG} values of other devices of a Safety Instrumented Function (SIF) in order to determine suitability for a specific Safety Integrity Level (SIL).

6 Terms and Definitions

FIT	Failure In Time ($1x10^{-9}$ failures per hour)
FMEDA	Failure Mode Effect and Diagnostic Analysis
HART	Highway Addressable Remote Transducer
HFT	Hardware Fault Tolerance
Low demand mode	Mode, where the frequency of demands for operation made on a safety-related system is no greater than one per year and no greater than twice the proof test frequency.
PFD_{AVG}	Average Probability of Failure on Demand
SFF	Safe Failure Fraction summarizes the fraction of failures, which lead to a safe state and the fraction of failures that will be detected by diagnostic measures and lead to a defined safety action.
SIF	Safety Instrumented Function
SIL	Safety Integrity Level
SIS	Safety Instrumented System – Implementation of one or more Safety Instrumented Functions. A SIS is composed of any combination of sensor(s), logic solver(s), and final element(s).
Type A component	"Non-Complex" component (using discrete elements); for details see 7.4.3.1.3 of IEC 61508-2
Type B component	"Complex" component (using micro controllers or programmable logic); for details see 7.4.3.1.3 of IEC 61508-2

7 Status of the document

7.1 Liability

exida.com prepares FMEDA reports based on methods advocated in International standards. Failure rates are obtained from a collection of industrial databases. *exida.com* accepts no liability whatsoever for the use of these numbers or for the correctness of the standards on which the general calculation methods are based.

7.2 Releases

Version:	V1	
Revision:	R1.1	
Version History:	V2, R2.0:	Updated data after Fault Injection Testing, February 6, 2004
	V2, R1.0:	Updated data after HW change, December 18, 2003
	V1, R1.1:	Updated product name, November 14, 2003
	V1, R1.0:	Released to client, October 03, 2003
	V0, R1.0:	Draft; September 26, 2003
Authors:	William M. Goble – John C. Grebe	
Review:	V0, R1.0:	William M. Goble, exida.com
	V1, R1.0:	Rachel Amkreutz, exida.com
Release status:	Released to client	

7.3 Future Enhancements

At request of client.

7.4 Release Signatures

John Grebe, Principal Engineer

Dr. William M. Goble, P.E., CFSE, Principal Partner

Appendix A: Proof tests to reveal dangerous undetected faults

According to section 7.4.3.2.2 f) of IEC 61508-2 proof tests shall be undertaken to reveal dangerous faults which are undetected by diagnostic tests. This means that it is necessary to specify how dangerous undetected faults which have been noted during the FMEDA can be detected during proof testing.

A.1 Proof test 1

Proof test 1 consists of the following steps, as described in Table 9.

Table 9 Steps for Proof Test 1

Step	Action
1	Bypass the safety PLC or take other appropriate action to avoid a false trip
2	Send a HART command to the transmitter to go to the high alarm current output and verify that the analog current reaches that value. This tests for compliance voltage problems such as a low loop power supply voltage or increased wiring resistance. This also tests for other possible failures.
3	Send a HART command to the transmitter to go to the low alarm current output and verify that the analog current reaches that value. This tests for possible quiescent current related failures
4	Restore the loop to full operation
5	Remove the bypass from the safety PLC or otherwise restore normal operation

This test will detect approximately 50% of possible DU failures in the transmitter.

A.1 Proof test 2

Proof test 1 consists of the following steps, as described in Table 10.

Table 10 Steps for Proof Test 2

Step	Action
1	Bypass the safety PLC or take other appropriate action to avoid a false trip
2	Perform Proof Test 1
3	Perform a two-point calibration of the transmitter
4	Restore the loop to full operation
5	Remove the bypass from the safety PLC or otherwise restore normal operation

This test will detect approximately 99% of possible DU failures in the transmitter.

Appendix B: Lifetime of critical components

Although a constant failure rate is assumed by the probabilistic estimation method (see section 4.3) this only applies provided that the useful lifetime of components is not exceeded. Beyond their useful lifetime the result of the probabilistic calculation method is therefore meaningless, as the probability of failure significantly increases with time. The useful lifetime is highly dependent on the component itself and its operating conditions – temperature in particular (for example, electrolyte capacitors can be very sensitive).

This assumption of a constant failure rate is based on the bathtub curve, which shows the typical behavior for electronic components.

Therefore it is obvious that the PFD_{AVG} calculation is only valid for components that have this constant domain and that the validity of the calculation is limited to the useful lifetime of each component.

Table 11 shows which electrolytic capacitors are contributing to the dangerous undetected failure rate and therefore to the PFD_{AVG} calculation and what their estimated useful lifetime is.

Table 11: Useful lifetime of electrolytic capacitors contributing to λ_{du}

Type	Useful life at 40°C
Capacitor (electrolytic) - Tantalum electrolytic, solid electrolyte	Appr. 500 000 hours

As the capacitors are the limiting factors with regard to the useful lifetime of the system, the useful lifetime should be limited to 50 years.